SHIMANO

TRINIDAD S A-RB

TN-30A

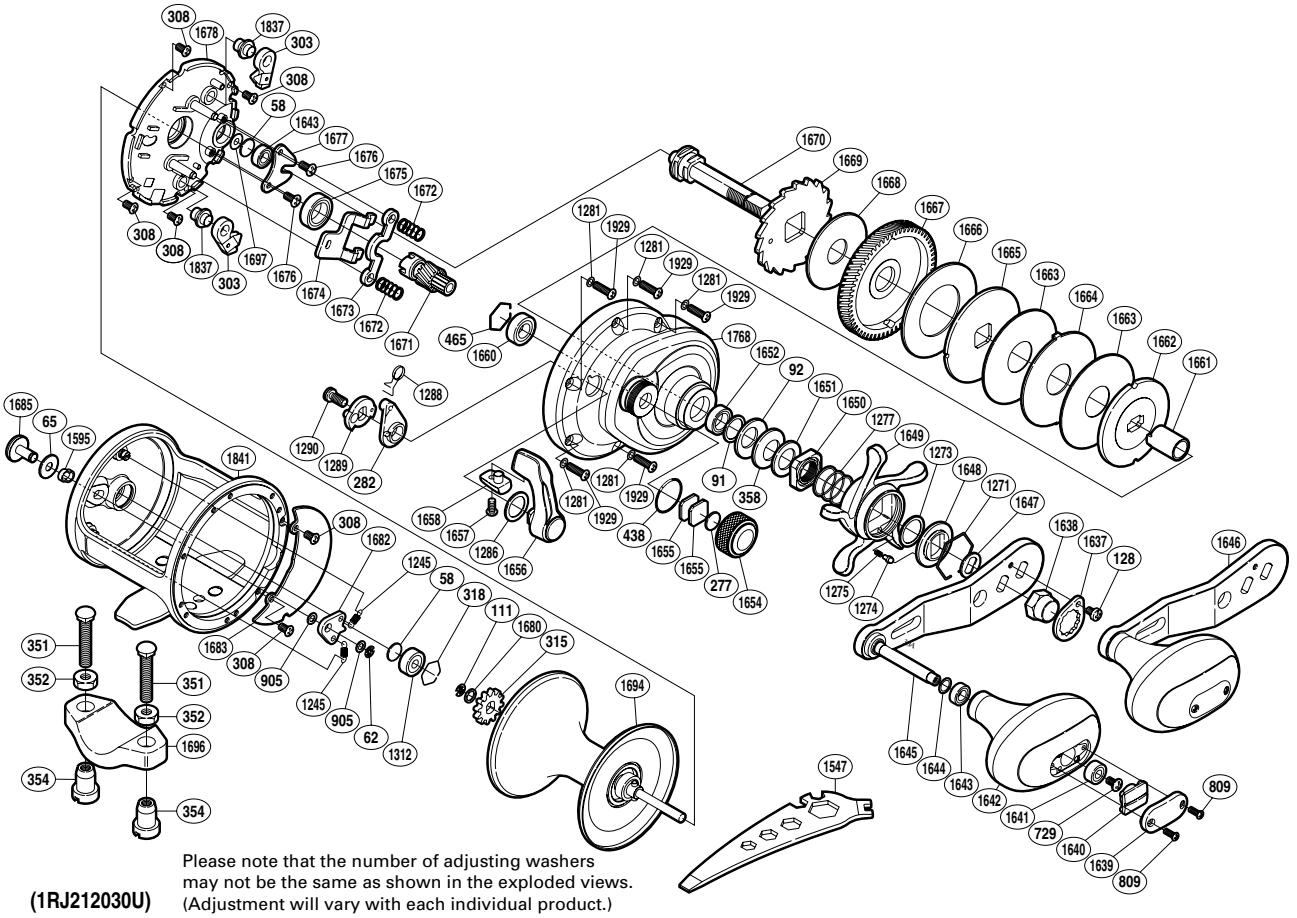

Please note that the number of adjusting washers may not be the same as shown in the exploded views. (Adjustment will vary with each individual product.)

(1RJ212030U)

Part No.	Description	Part No.	Description	Part No.	Description
TGT0058	Spacer B	TGT1312	Ball Bearing	TGT1667	Drive Gear
TGT0062	E Lock	TGT1595	Click Switch Cam	TGT1668	Drag Washer
TGT0065	Spacer	TGT1637	Handle Nut Plate	TGT1669	Anti-Reverse Ratchet
TGT0091	Washer	TGT1638	Handle Nut	TGT1670	Drive Shaft
TGT0092	Coned Disc Spring (8H)	TGT1639	Handle Knob I.D. Plate	TGT1671	Pinion Gear
TGT0111	E Lock	TGT1640	Handle Knob Seal	TGT1672	Yoke Spring
TGT0128	Screw	TGT1641	Ball Bearing	TGT1673	Yoke
TGT0277	Cast Control Spacer	TGT1642	Handle Knob	TGT1674	Clutch Plate
TGT0282	Eccentric Cam Bushing	TGT1643	Ball Bearing	TGT1675	Ball Bearing
TGT0303	Anti-Reverse Pawl	TGT1644	Washer	TGT1676	Screw
TGT0308	Screw	TGT1645	Handle Shank Assembly	TGT1677	Drive Shaft Retainer
TGT0315	Click Gear	TGT1646	Handle Assembly	TGT1678	Set Plate
TGT0318	Bearing Retainer	TGT1647	Drive Shaft Shield	TGT1680	Washer
TGT0358	Coned Disc Spring (8L)	TGT1648	Star Drag Click Plate	TGT1682	Click Pawl
TGT0438	O Ring	TGT1649	Star Drag	TGT1683	Set Plate Sticker
TGT0465	Bearing Retainer	TGT1650	Star Drag Nut	TGT1685	Click Button
TGT0729	Screw	TGT1651	Star Drag Spacer	TGT1694	Spool Assembly
TGT0809	Screw	TGT1652	Ball Bearing	TGT1697	Washer
TGT0905	Spacer	TGT1654	Cast Control Cap	TGT1768	Right Side Plate
TGT1245	Click Pawl Spring	TGT1655	Cast Control Spacer	TGT1837	Anti-Reverse Pawl Shaft
TGT1271	Click Plate Retainer	TGT1656	Clutch Lever	TGT1841	One-Piece Frame
TGT1273	Washer	TGT1657	Screw	TGT1929	Screw
TGT1274	Click Pin	TGT1658	Clutch Lever Protector		
TGT1275	Click Spring	TGT1660	Ball Bearing		
TGT1277	Star Drag Spring	TGT1661	Roller Clutch Inner Tube	TGT0351	Rod Clamp Bolt (accessory)
TGT1281	Washer	TGT1662	Pressure Plate	TGT0352	Rod Clamp Nut B (accessory)
TGT1286	Smoother	TGT1663	Drag Washer	TGT0354	Rod Clamp Nut A (accessory)
TGT1288	Clutch Spring	TGT1664	Eared Washer	TGT1696	Rod Clamp (accessory)
TGT1289	Clutch Cam	TGT1665	Drag Washer		
TGT1290	Screw	TGT1666	Drag Washer	TGT1547	Wrench (accessory)